Upper Bearing Ghost Door - Installation Instructions

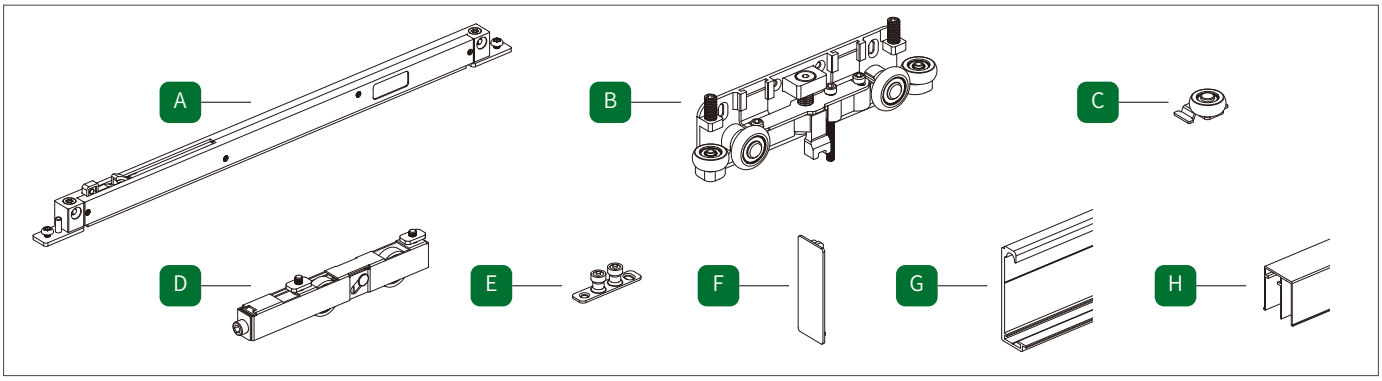



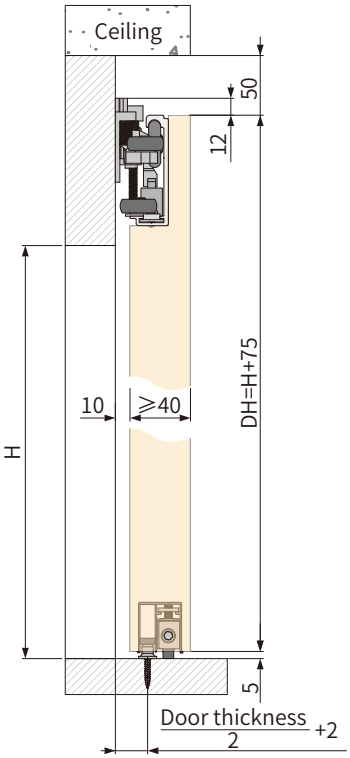

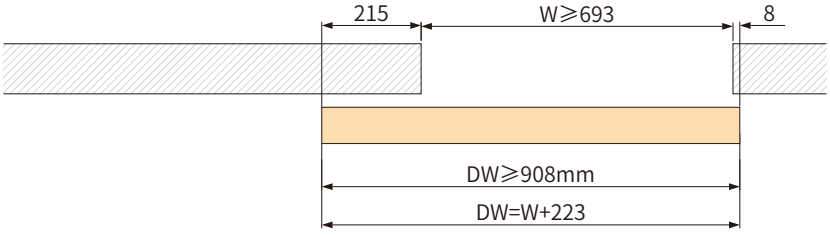

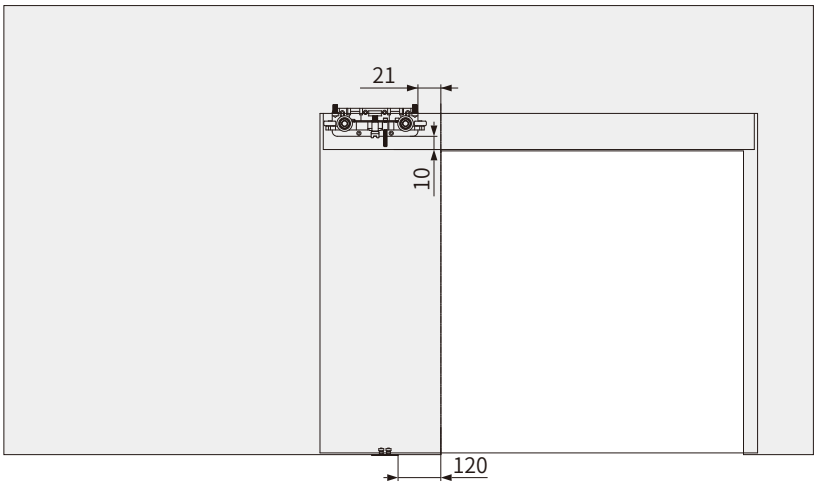

1 Cutting profiles

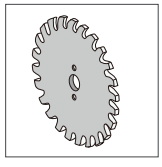

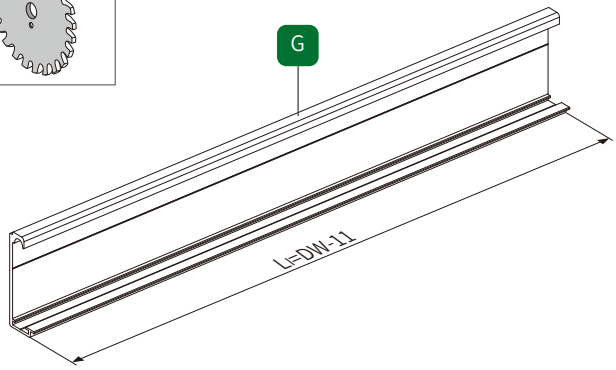

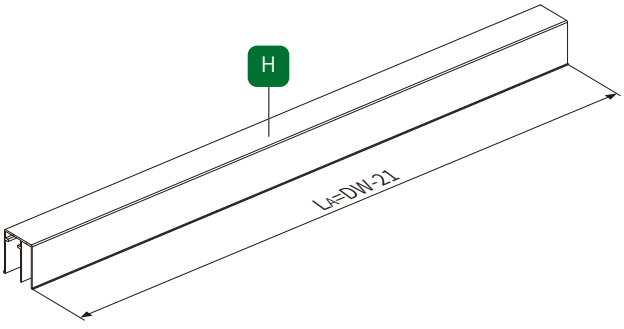

2023.10.28

2 Door panel Slotting size

with End cover

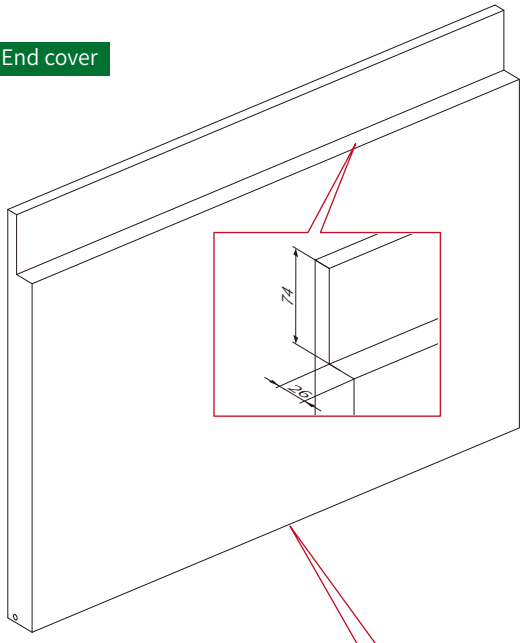

without End cover

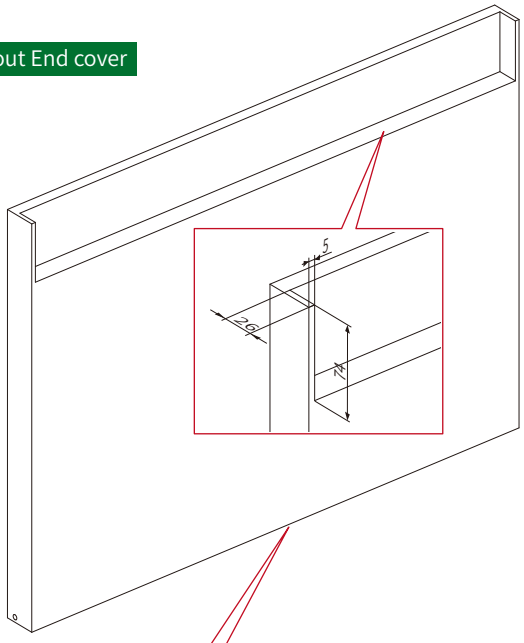

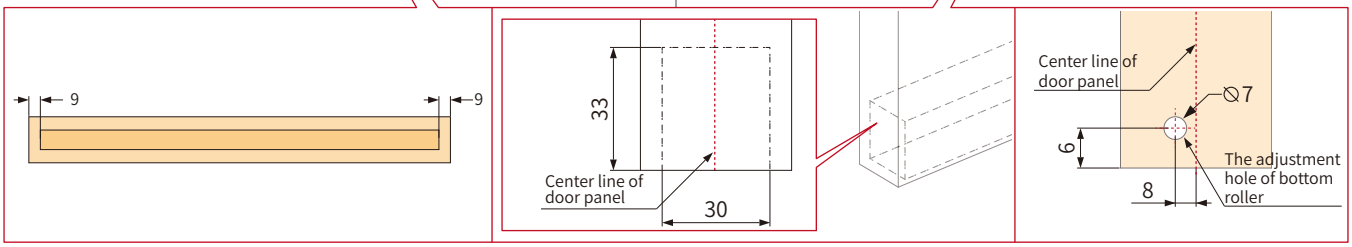

3 Install the top sliding track accessories

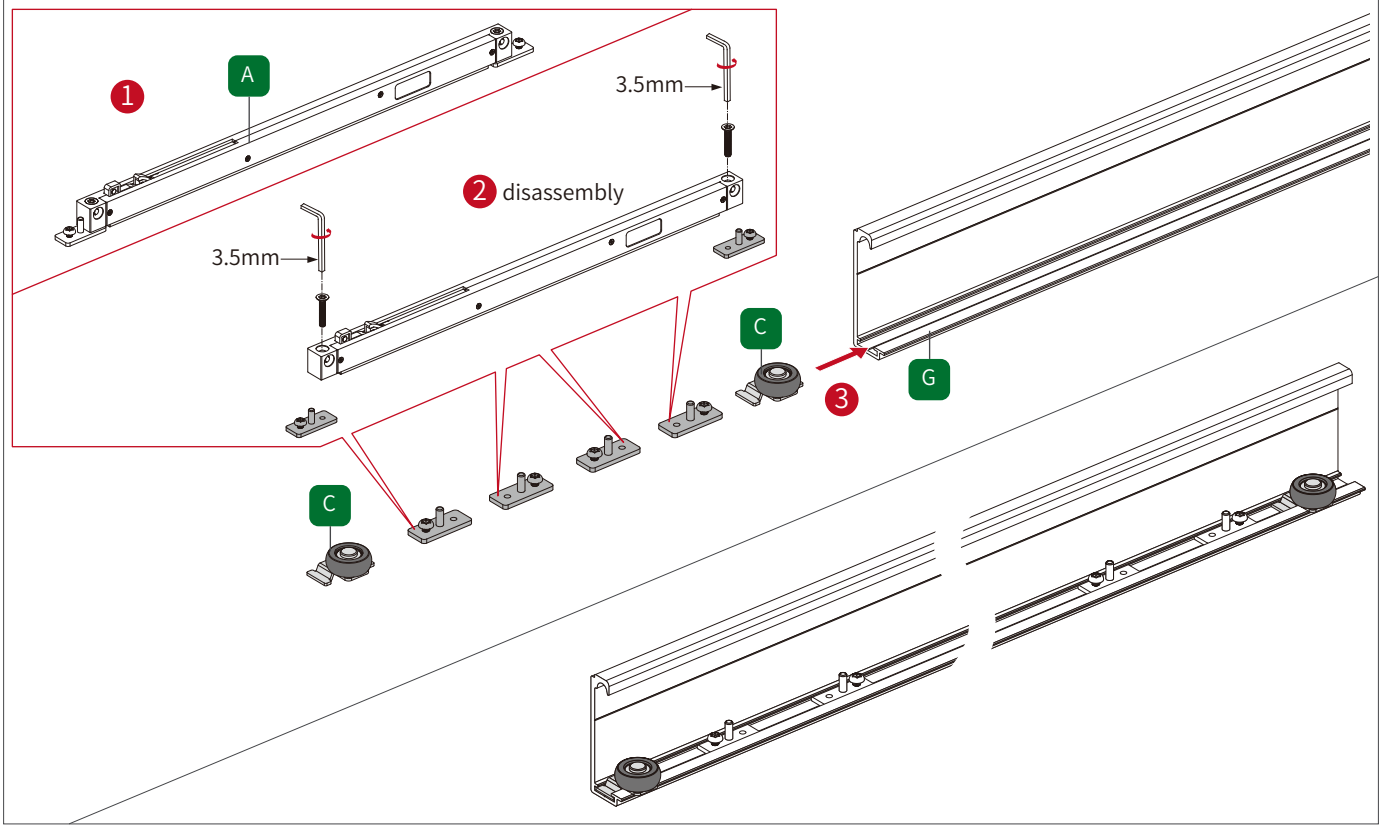

4 Install the bottom sliding roller

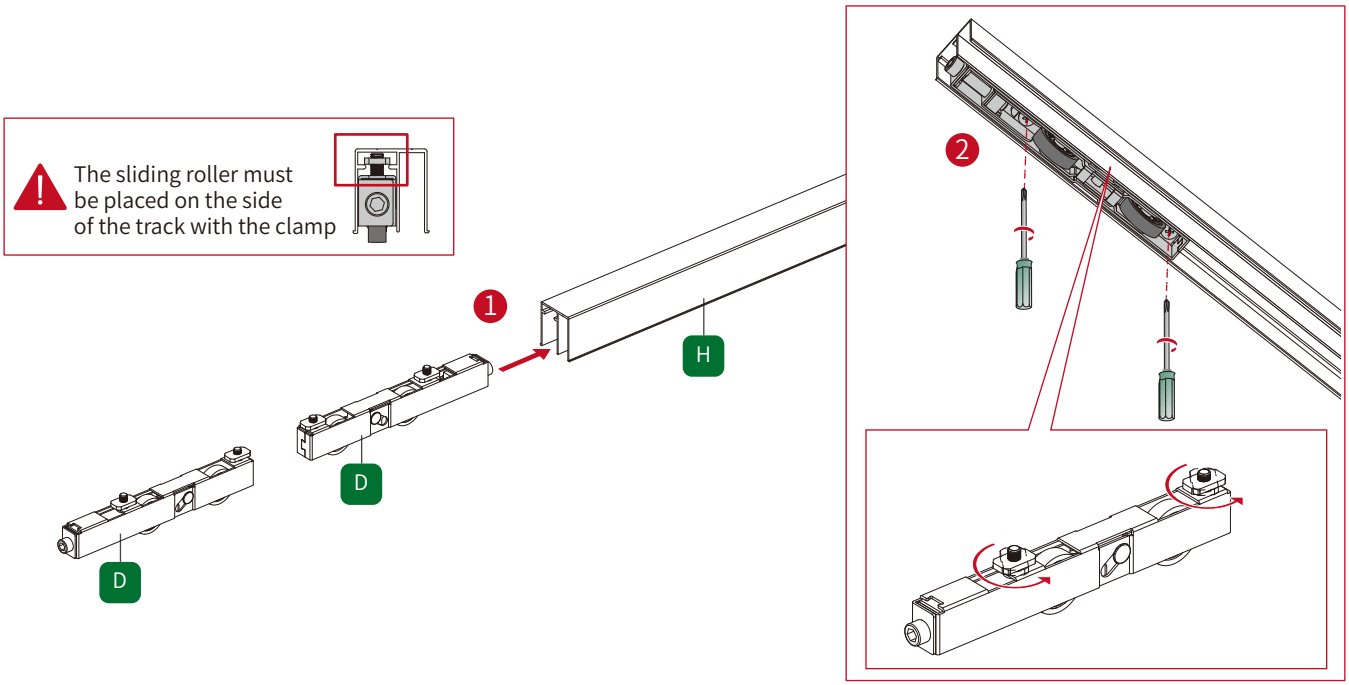

5 Install top sliding track and bottom sliding track

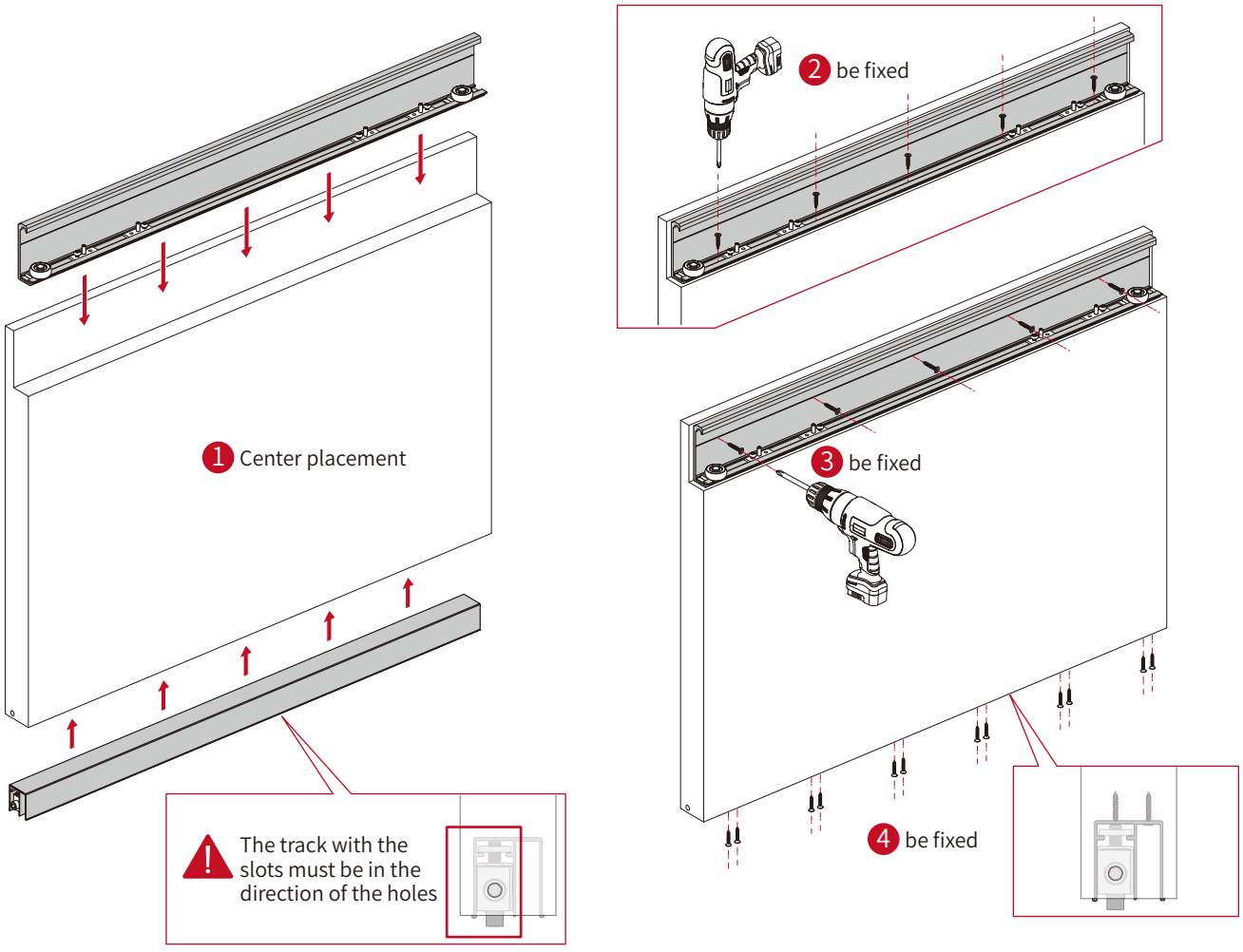

6 Install the door panel accessories

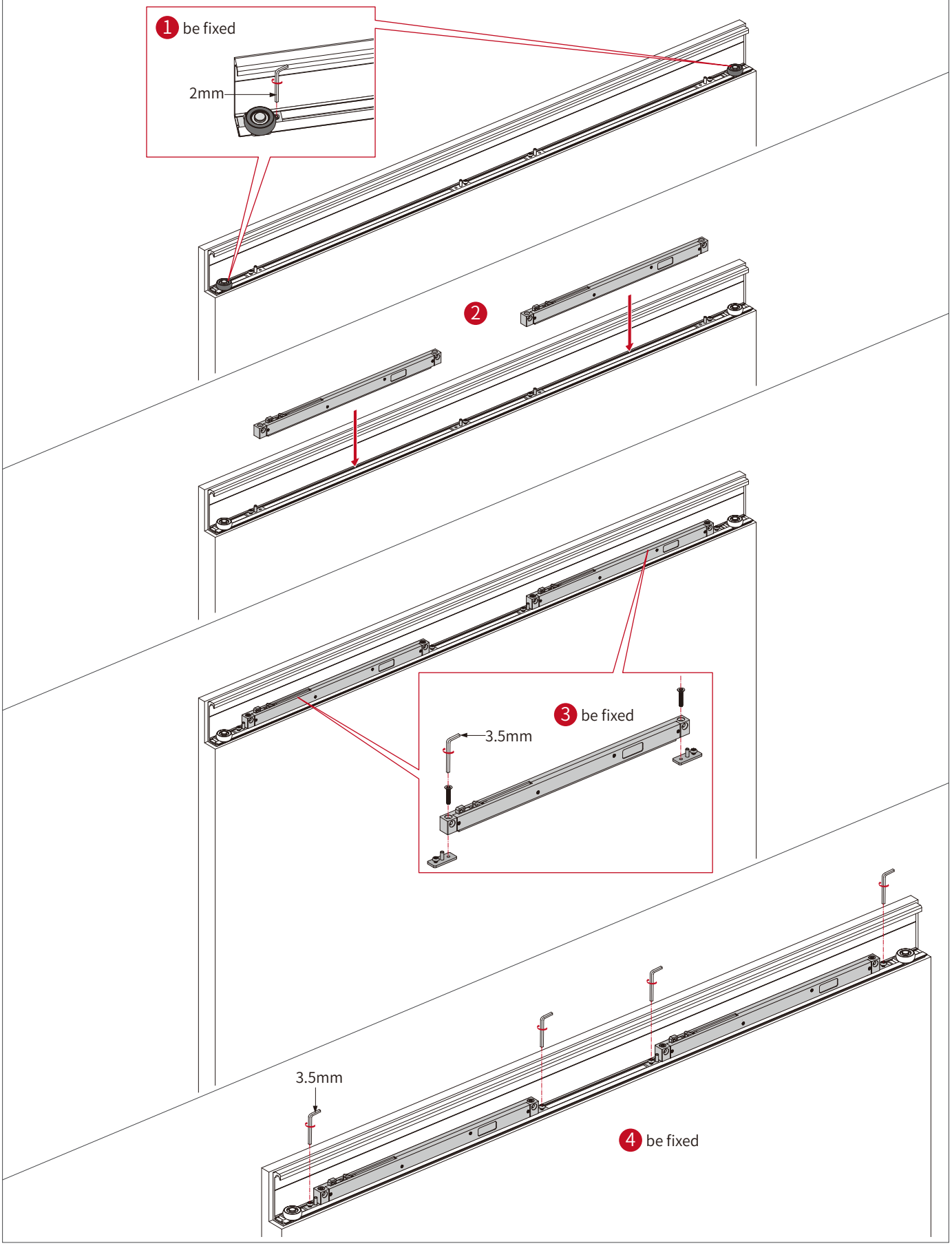

7 Install the door opening accessories

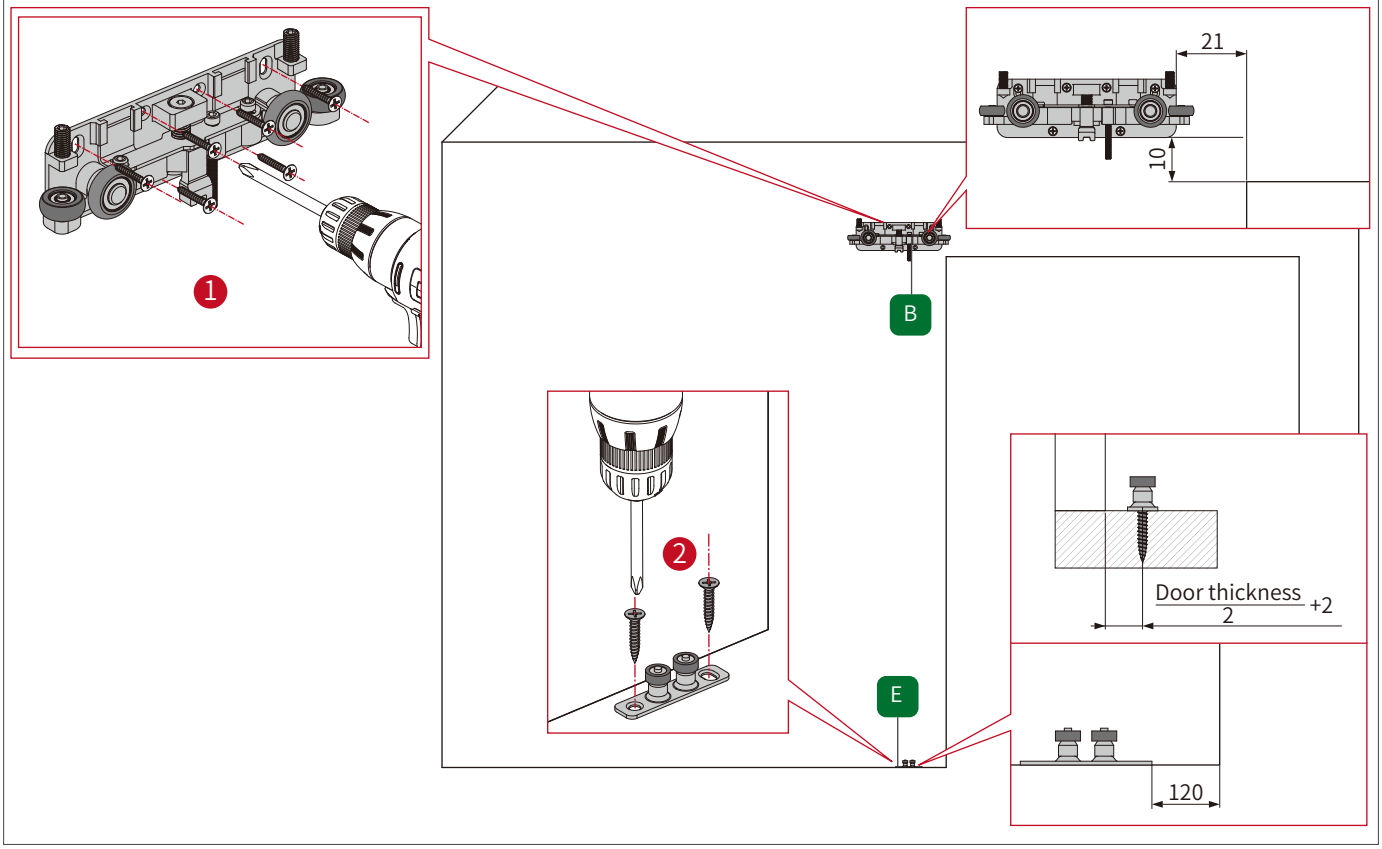

8 Install the door panel

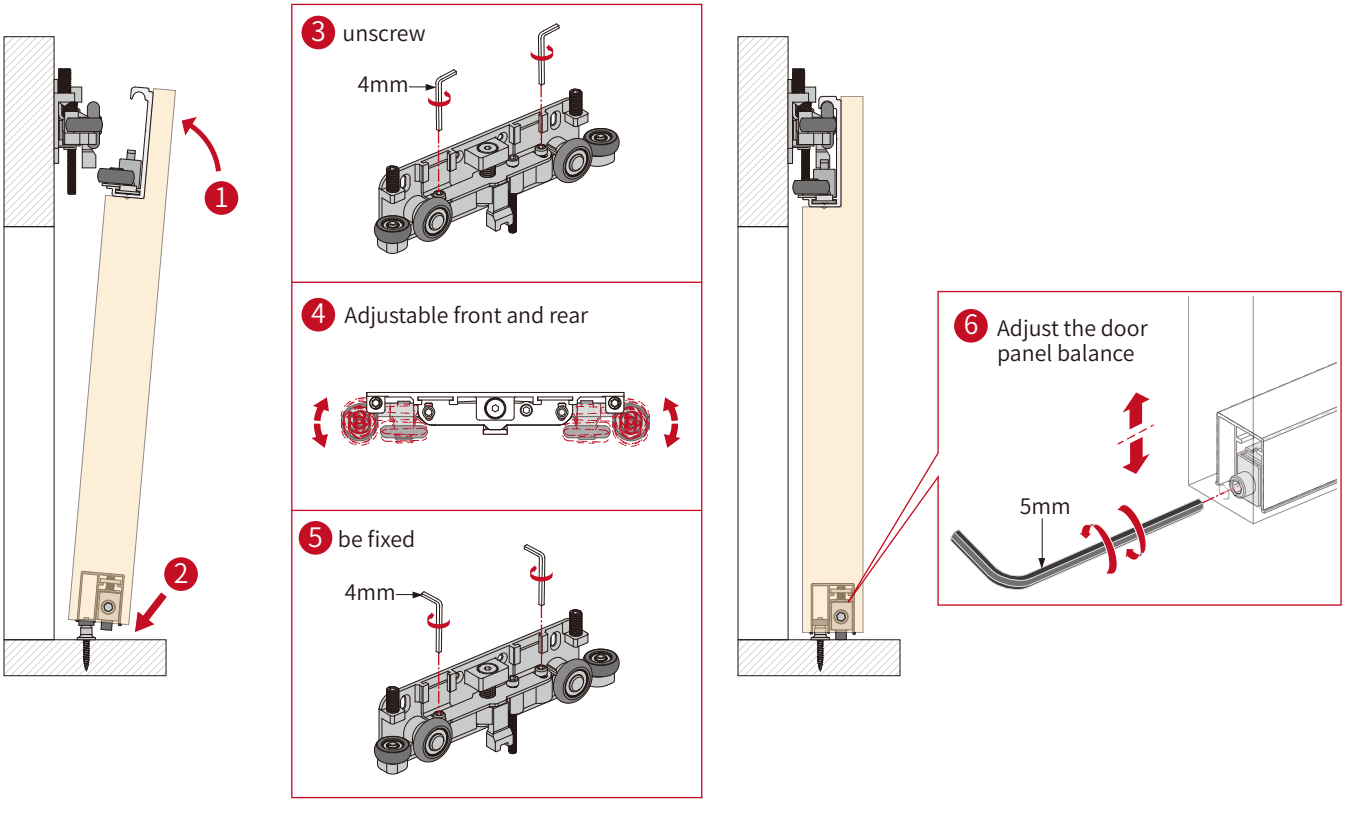

9 Positioning damper

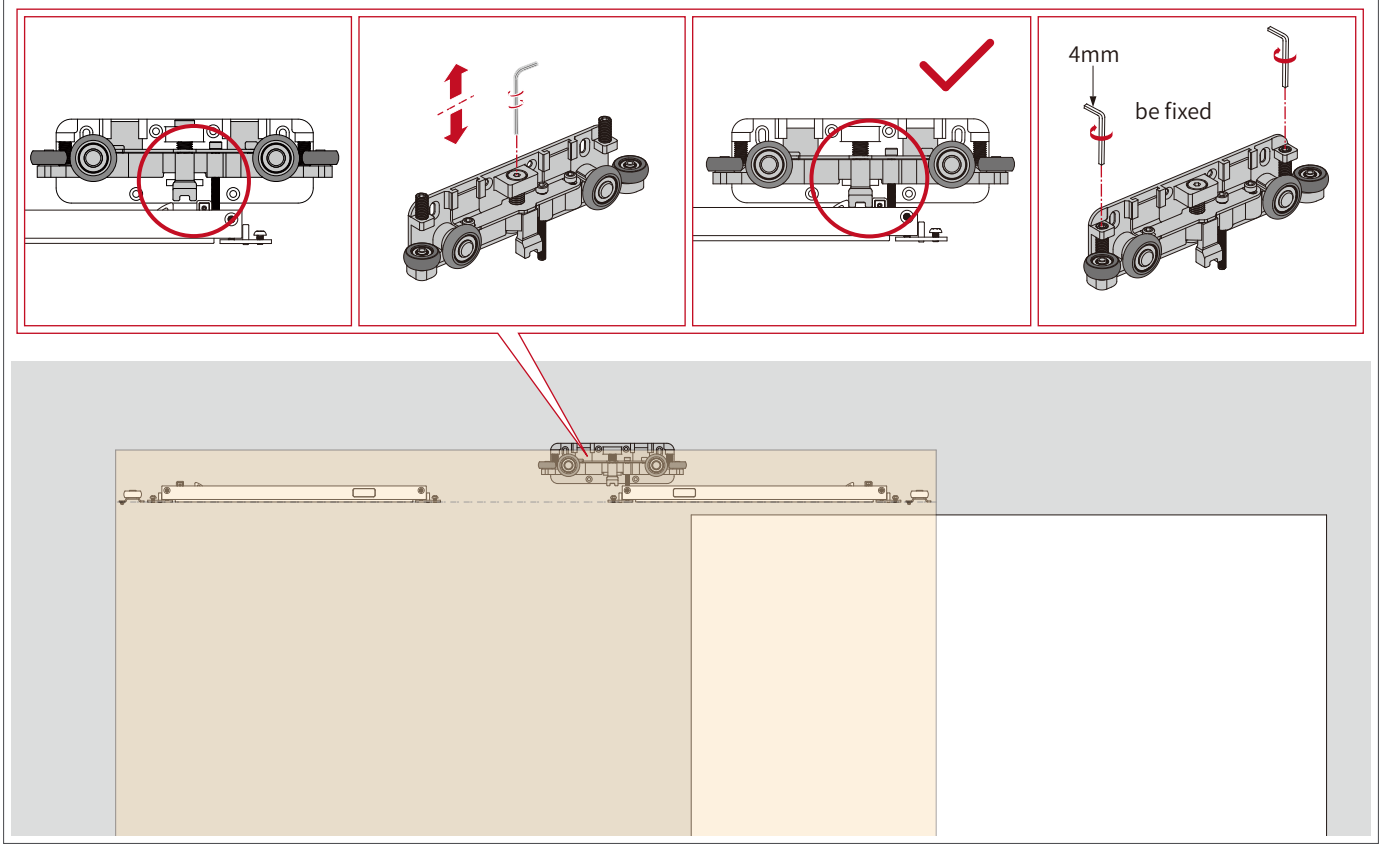

10 Install the side cover

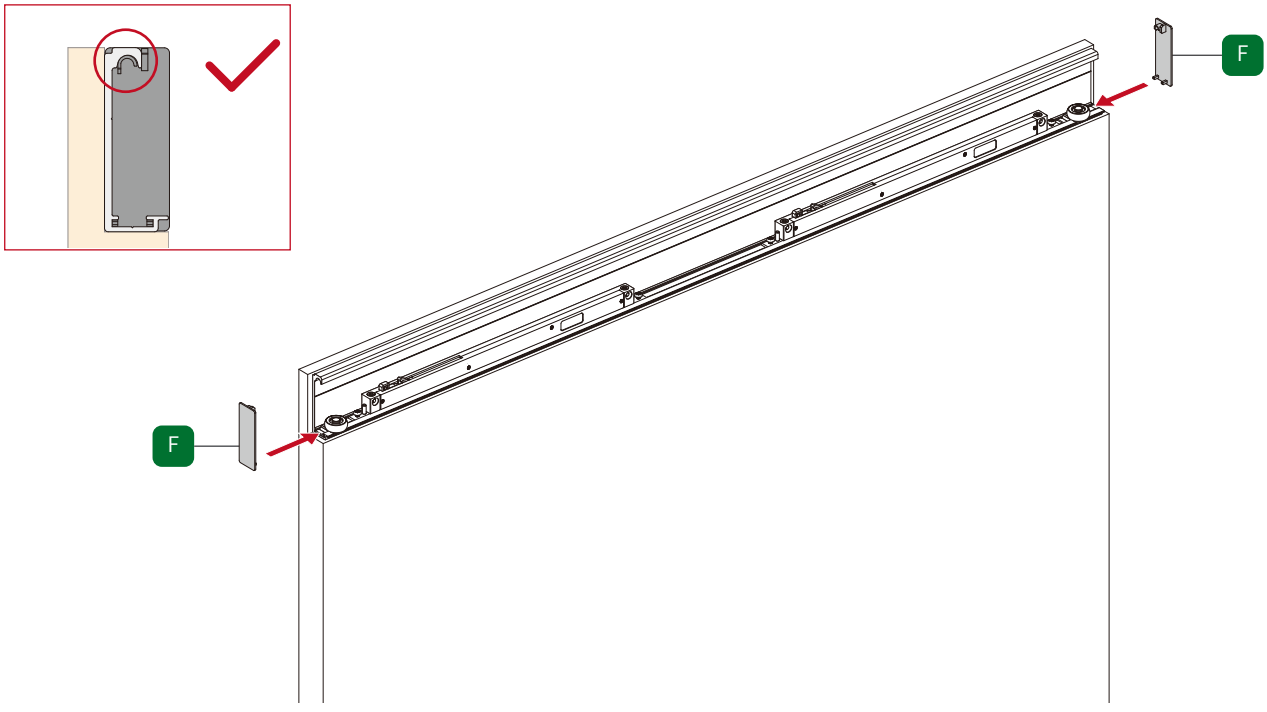

Warm tips: As the company's products will be upgraded from time to time, the product style, color, accessories and related parameters in this data are for reference only. If there is any change without prior notice, please refer to the material; All interpretation rights are reserved by the Company